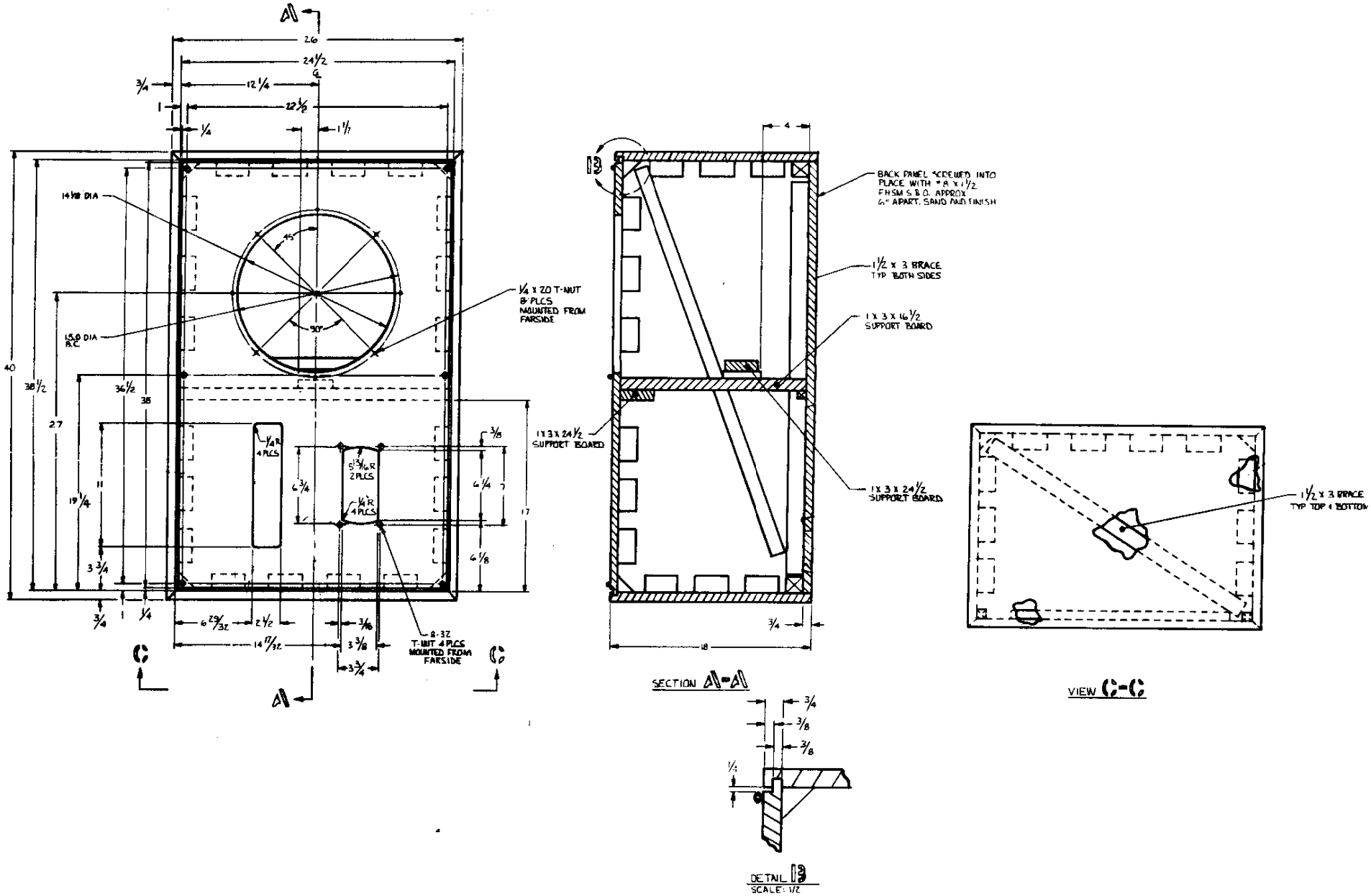
26
24 1/2
12 1/4
22 1/8
14 1/8 DIA
15.0 DIA B.C.
1/4 x 20 T-NUT 8 PLCS MOUNTED FROM FARSIDE
1/4 R 4 PLCS
5 13/16 R 2 PLCS
8-32 T-NUT 4 PLCS MOUNTED FROM FARSIDE
BACK PANEL SCREWED INTO PLACE WITH #8 x 1 1/2 FHSM S.B.O. APPROX 6" APART. SAND AND FINISH
1 1/2 x 3 BRACE TYP BOTH SIDES
1 x 3 x 16 1/2 SUPPORT BOARD
1 x 3 x 24 1/2 SUPPORT BOARD
1 x 3 x 24 1/2 SUPPORT BOARD
1 1/2 x 3 BRACE TYP TOP & BOTTOM
SECTION A-A
VIEW C-C
DETAIL B
SCALE: 1/2

620 Cabinet